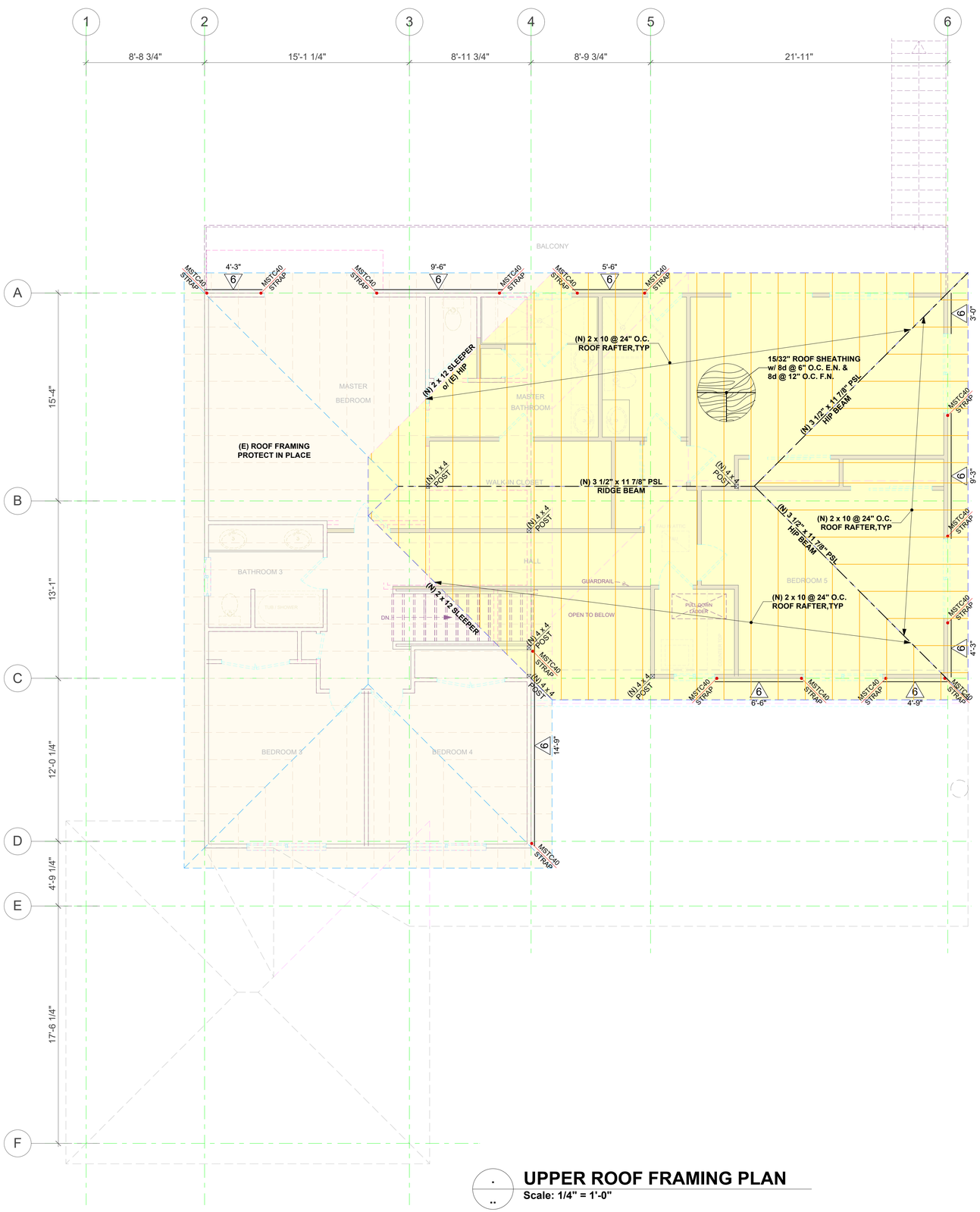

UPPER ROOF FRAMING PLAN

Scale: 1/4" = 1'-0"

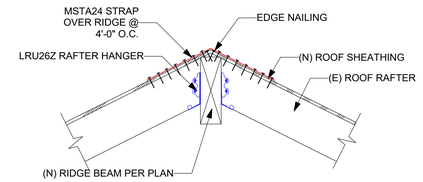

1 RIDGE BEAM CONNECTION

Scale: 1" = 1'-0"

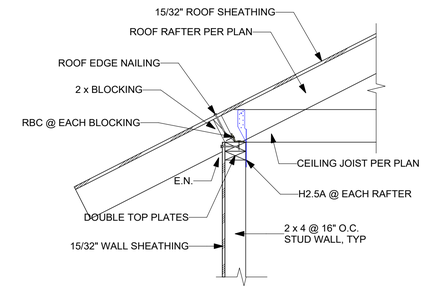

2 SHEAR TRANSFER @ ROOF

Scale: 1" = 1'-0"

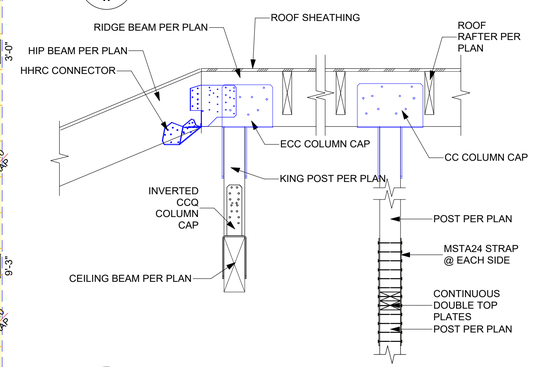

3 HIP & RIDGE SUPPORT

1" = 1'-0"

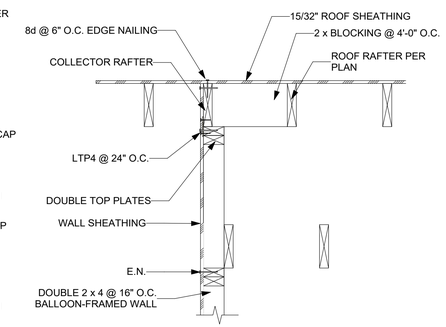

4 GABLE SHEAR TRANSFER @ ROOF

Scale: 1" = 1'-0"

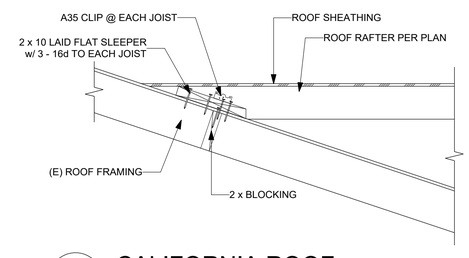

5 CALIFORNIA ROOF

Scale: 1" = 1'-0"

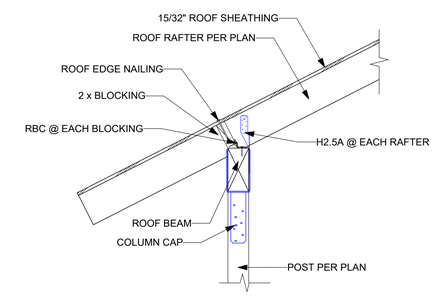

6 SHEAR TRANSFER @ ROOF

Scale: 1" = 1'-0"

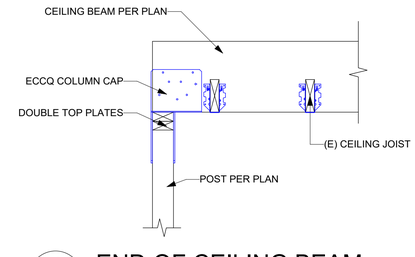

7 END OF CEILING BEAM

1" = 1'-0"

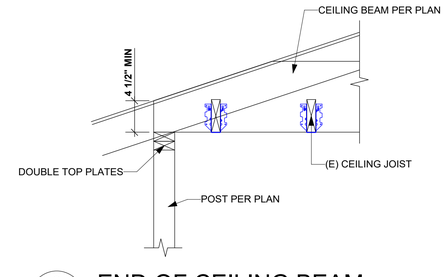

8 END OF CEILING BEAM

1" = 1'-0"

Engineer:

DB ENGINEERING
2021 The Alameda, Suite 360
San Jose, CA 95126
Phone: (408) 621-0114
Email: db.dbengineering@gmail.com

Designer:
Michael Radu
Pacific Blue Developments
35 Colleen Way
Campbell, CA 95008
(408) 504-6826

Project:

ADDITION & REMODEL

695 BICKNELL ROAD
LOS GATOS, CA 95030

Job Number: 22045

Date: December 16, 2022

Revisions:

Sheet

S2

of 7 sheets